PAYLOAD VOLUME ENVELOPE

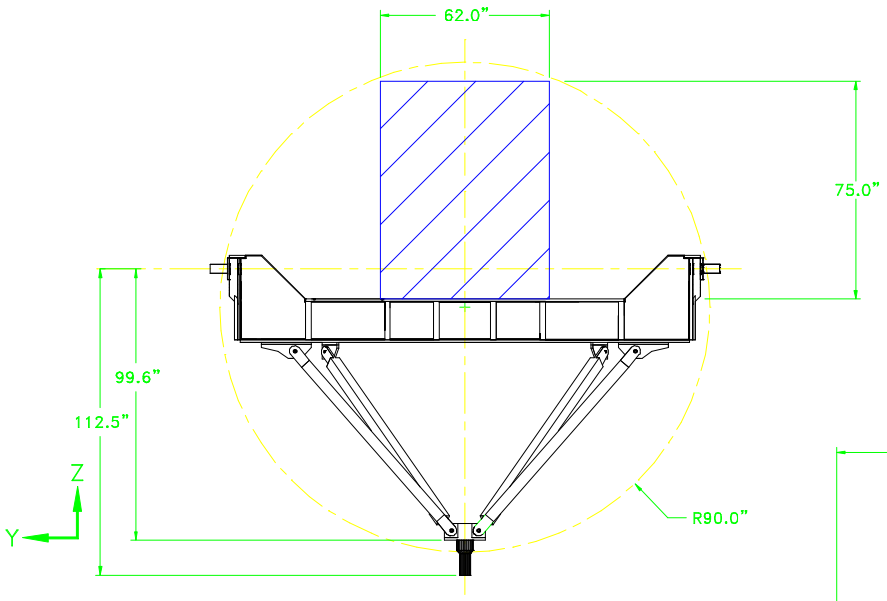

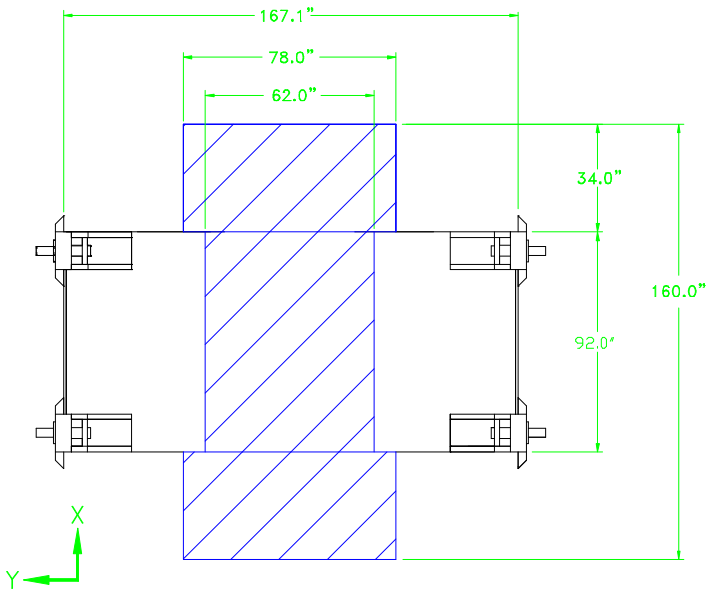

PDR9C-5-1-97